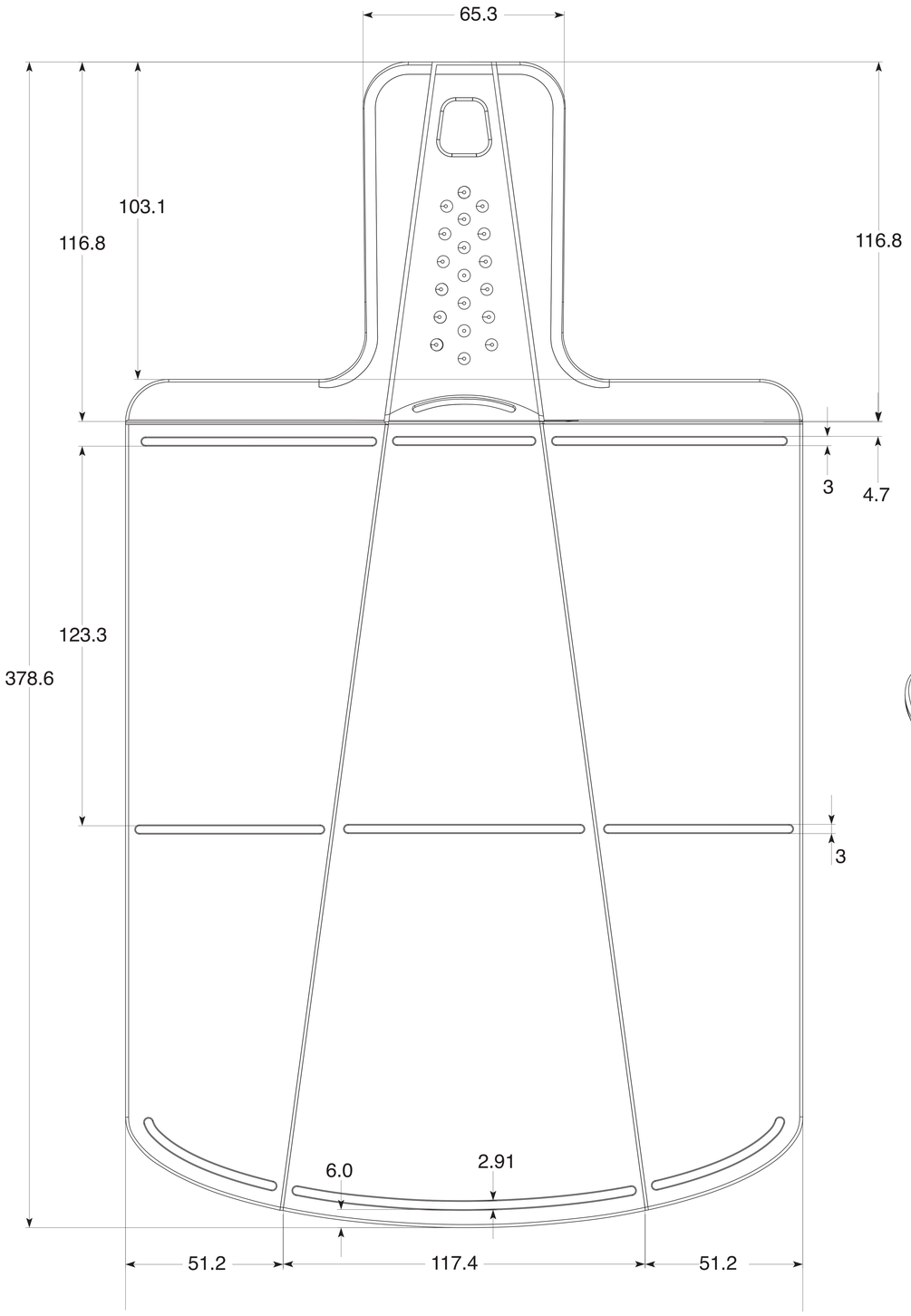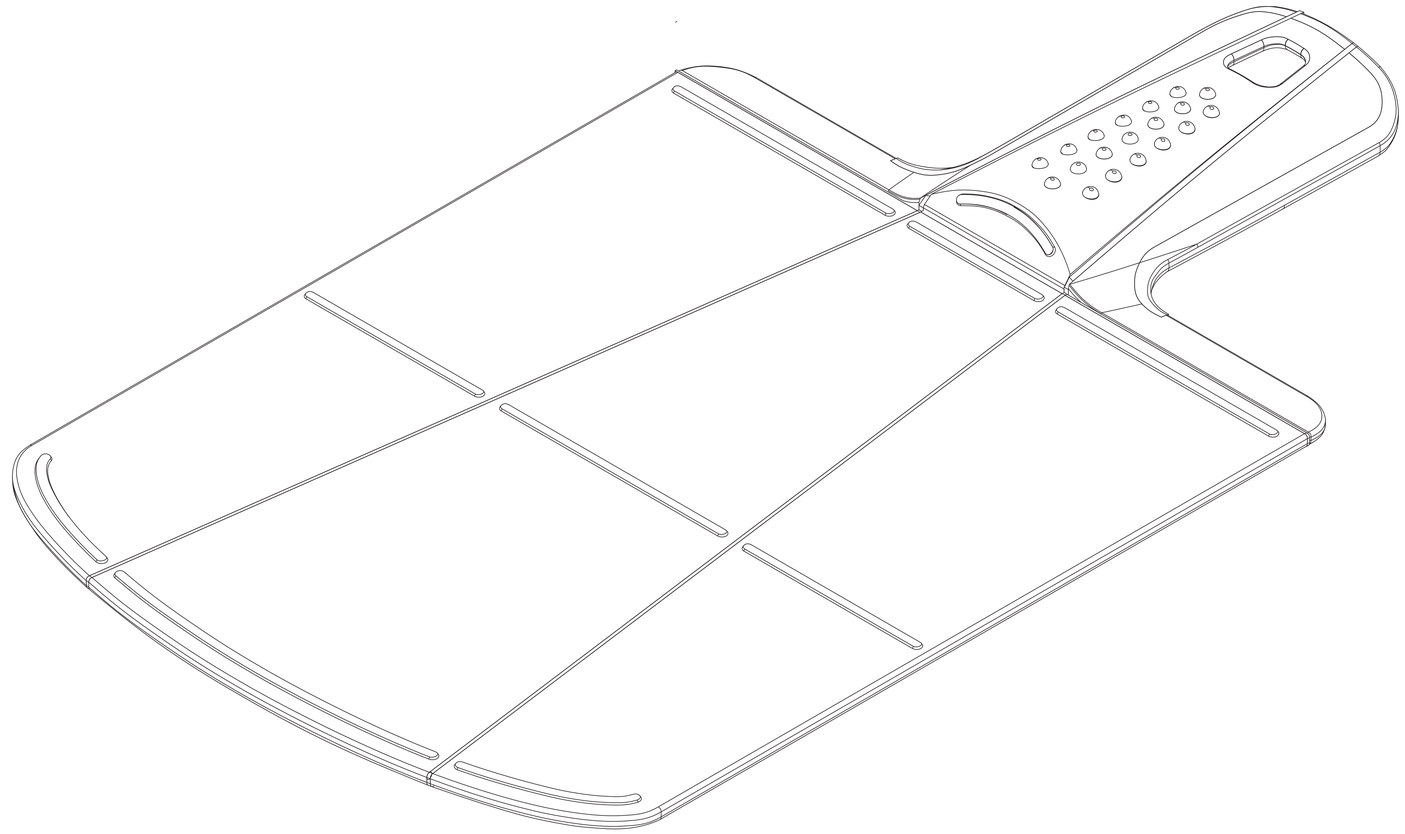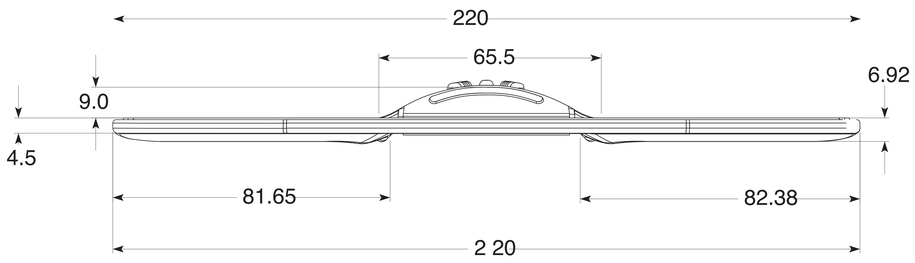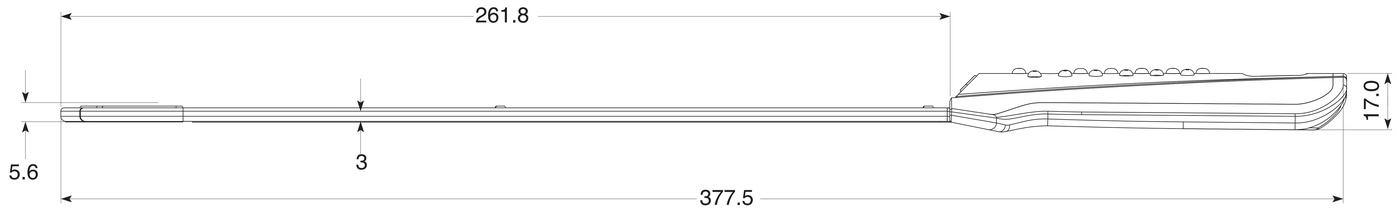Caret Folded