WATER DRINK FOR CATS

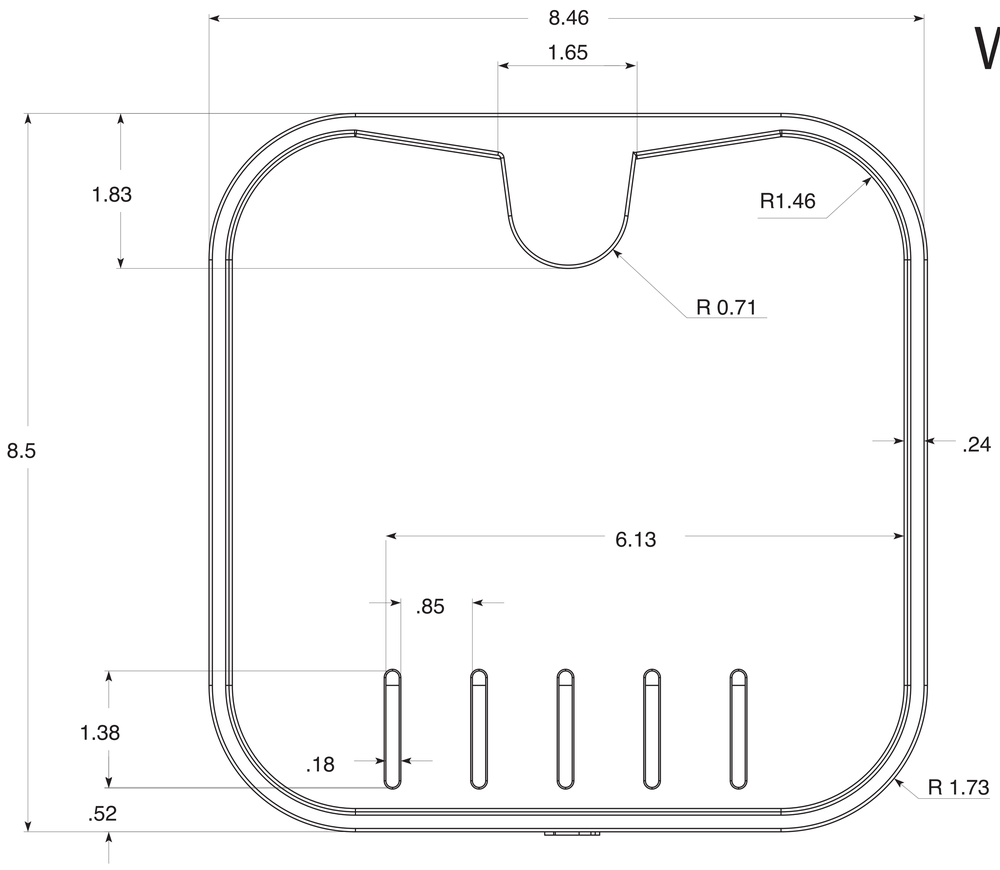

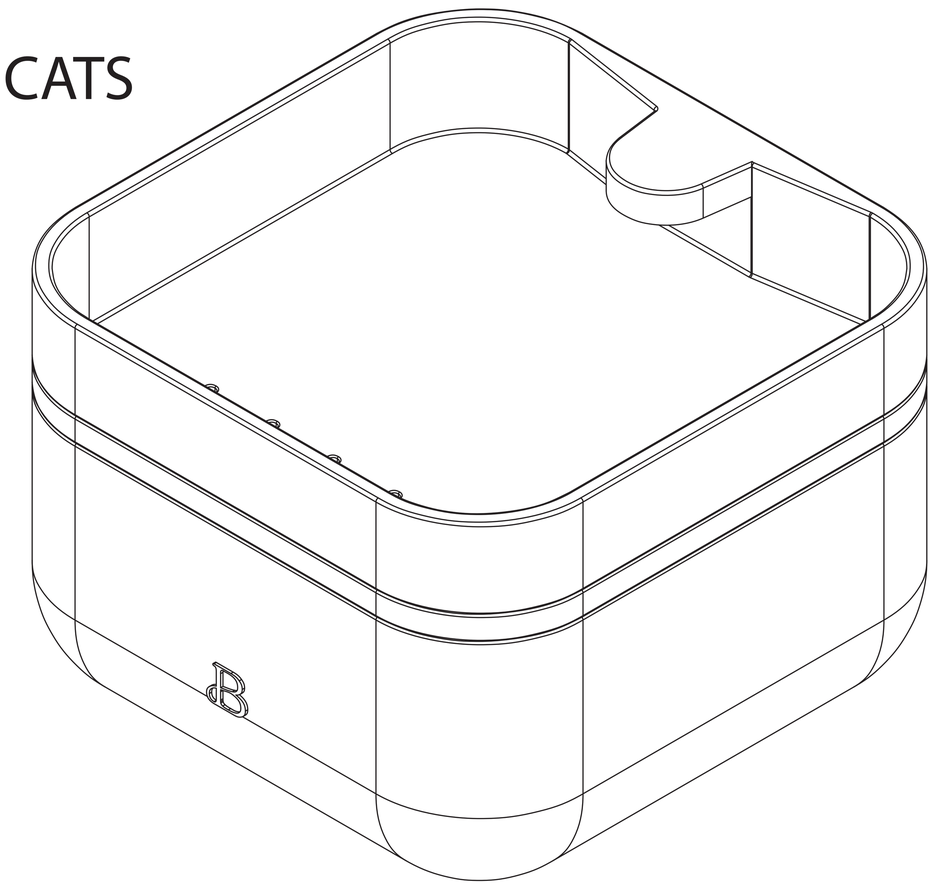

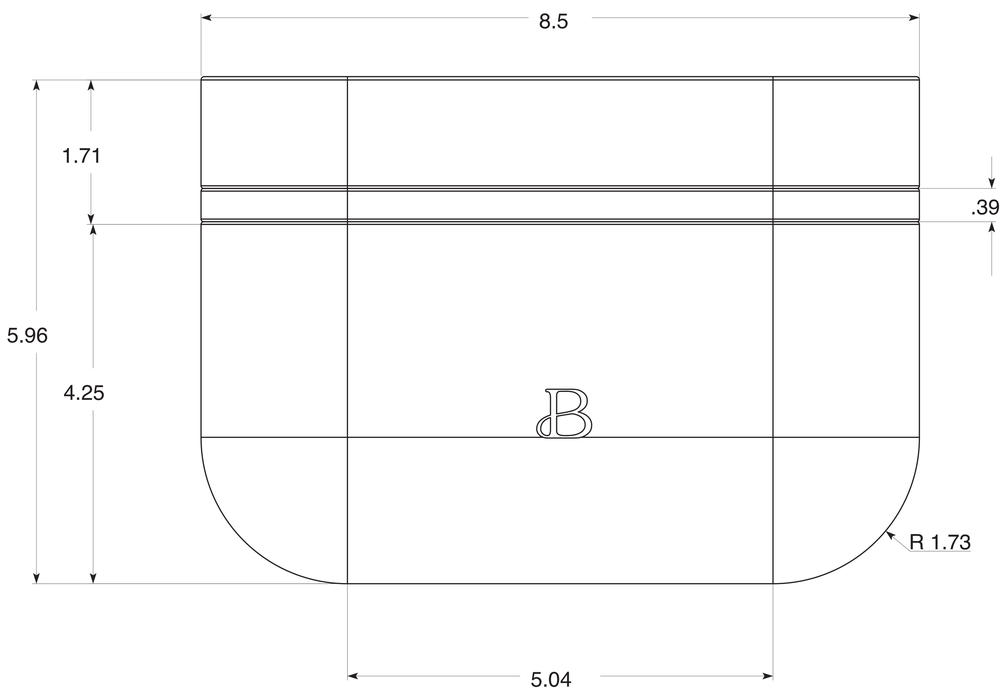

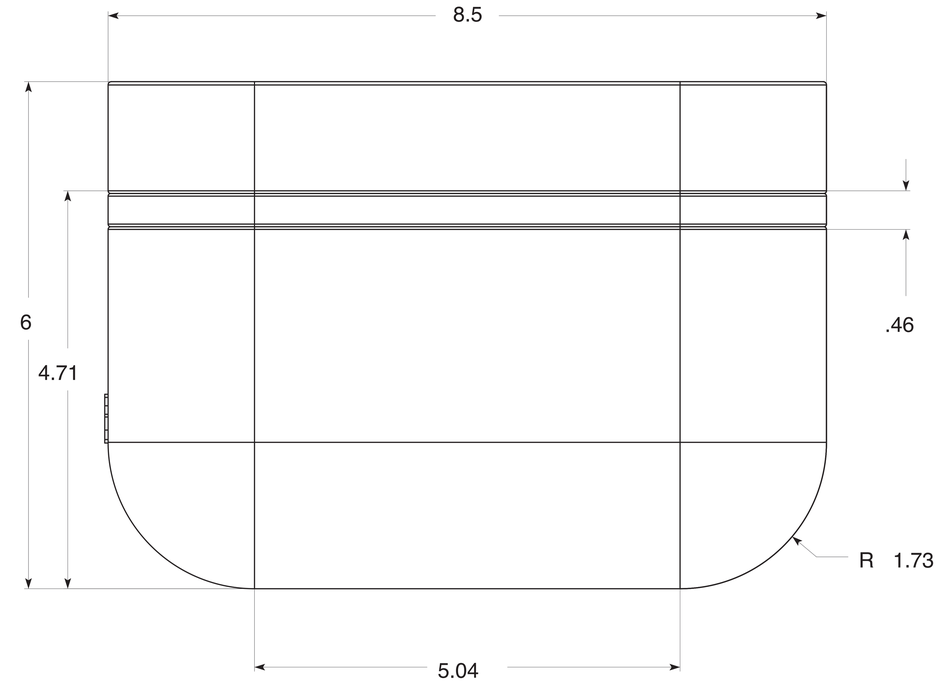
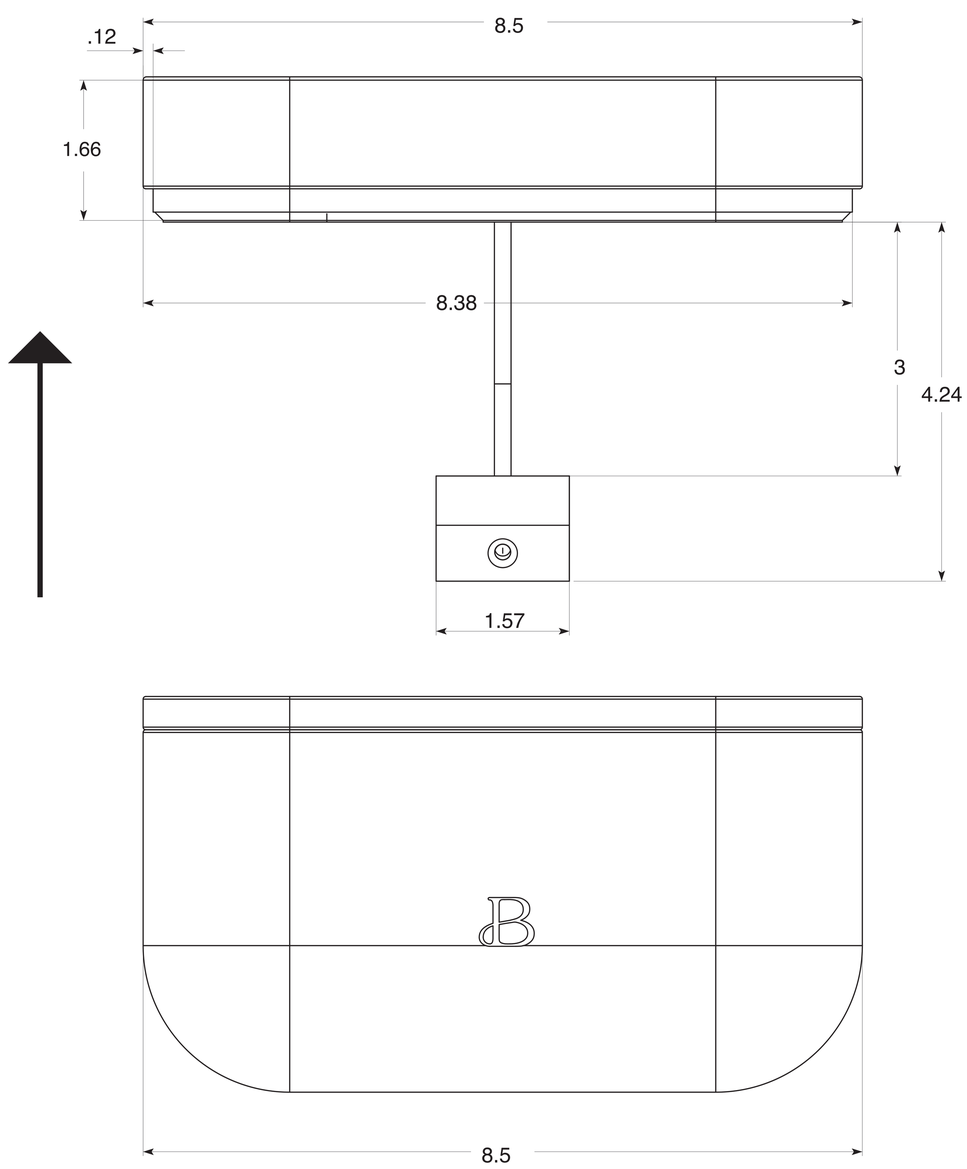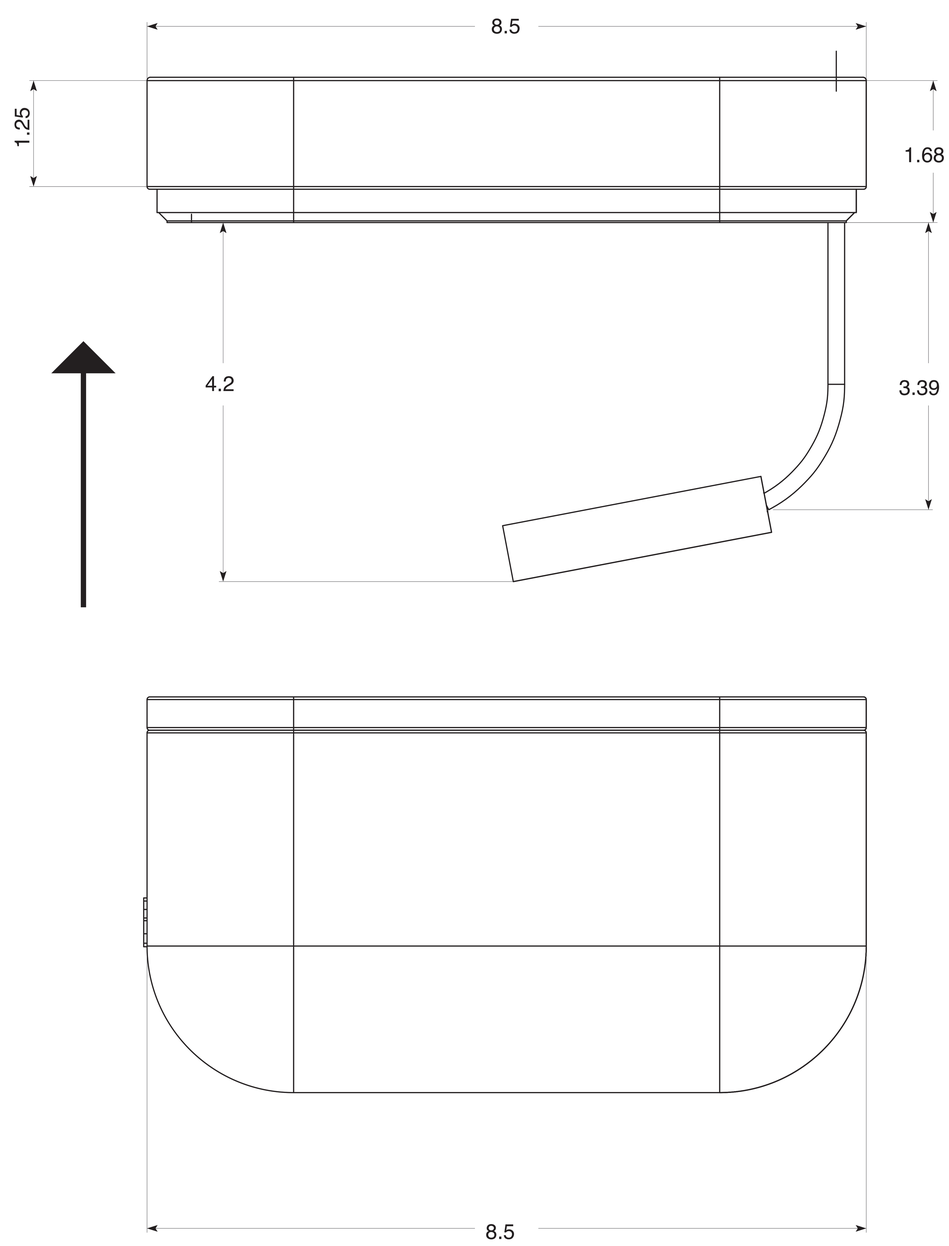
EXPLOAT