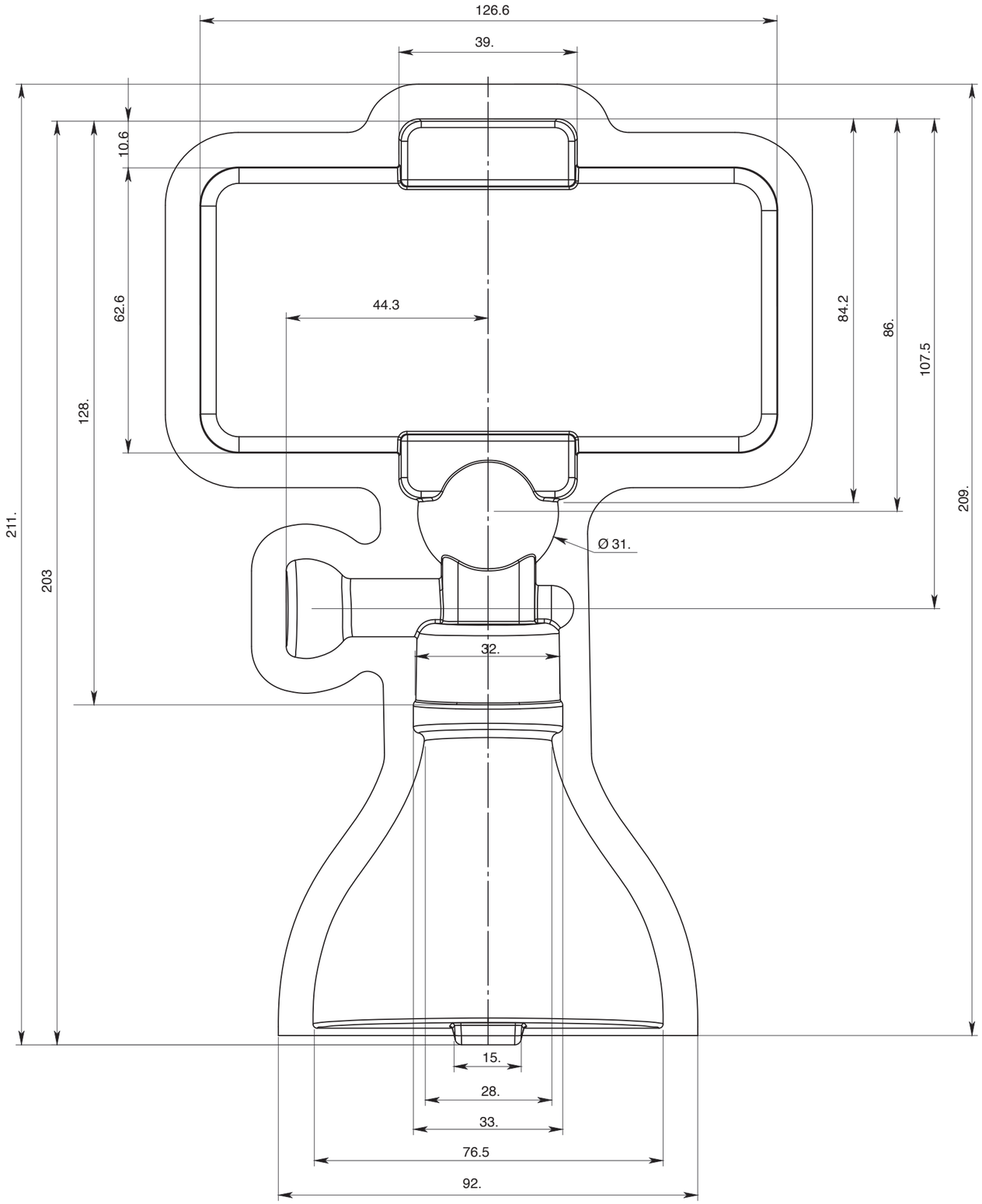

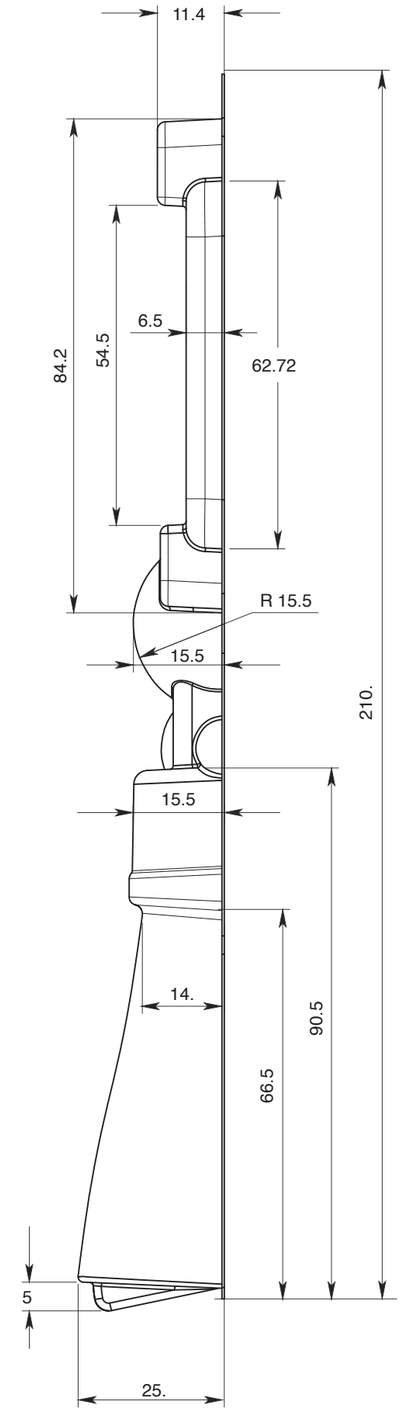

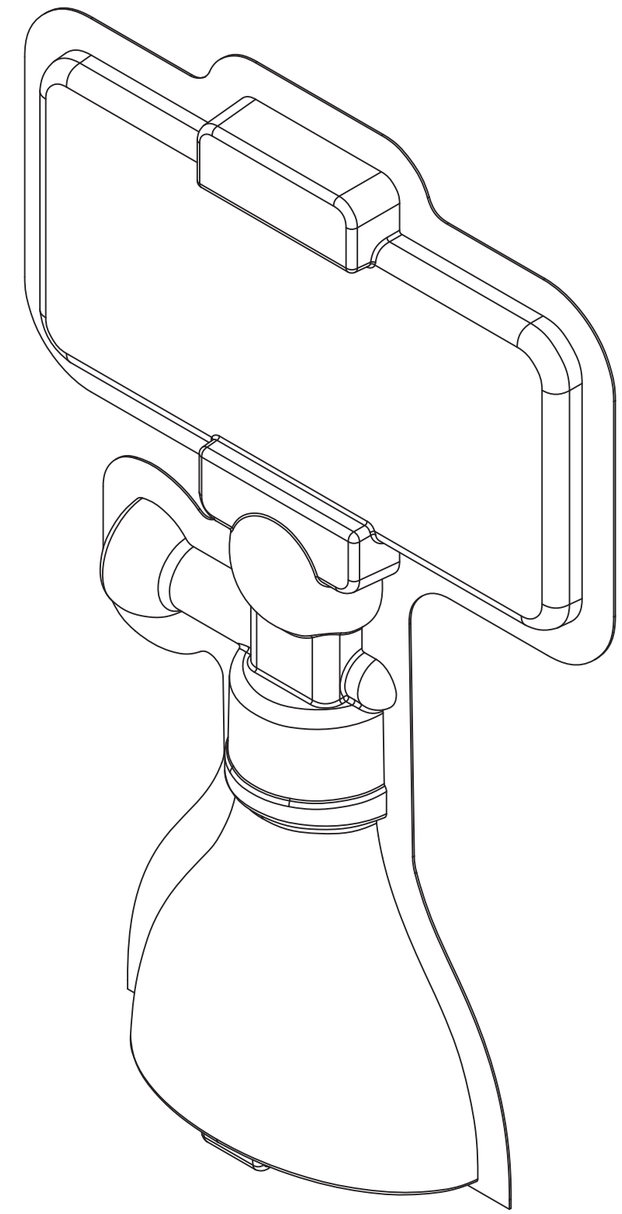

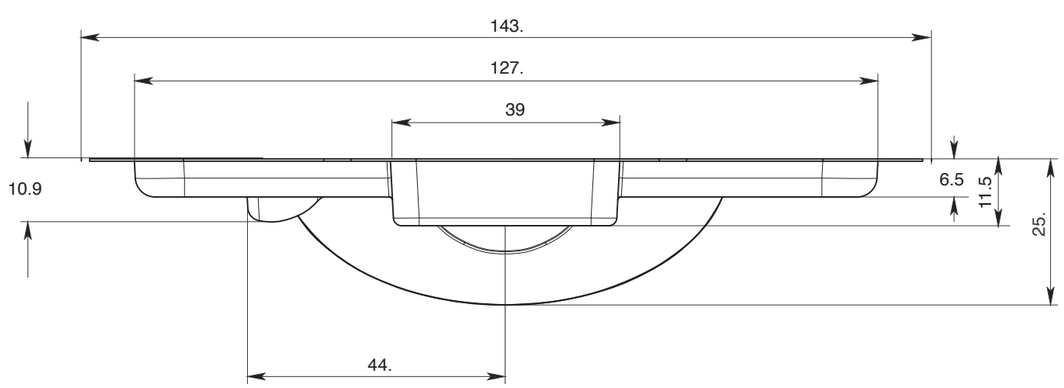

TP-QPBT front blister

Use Clear PET plastic 0.4mm