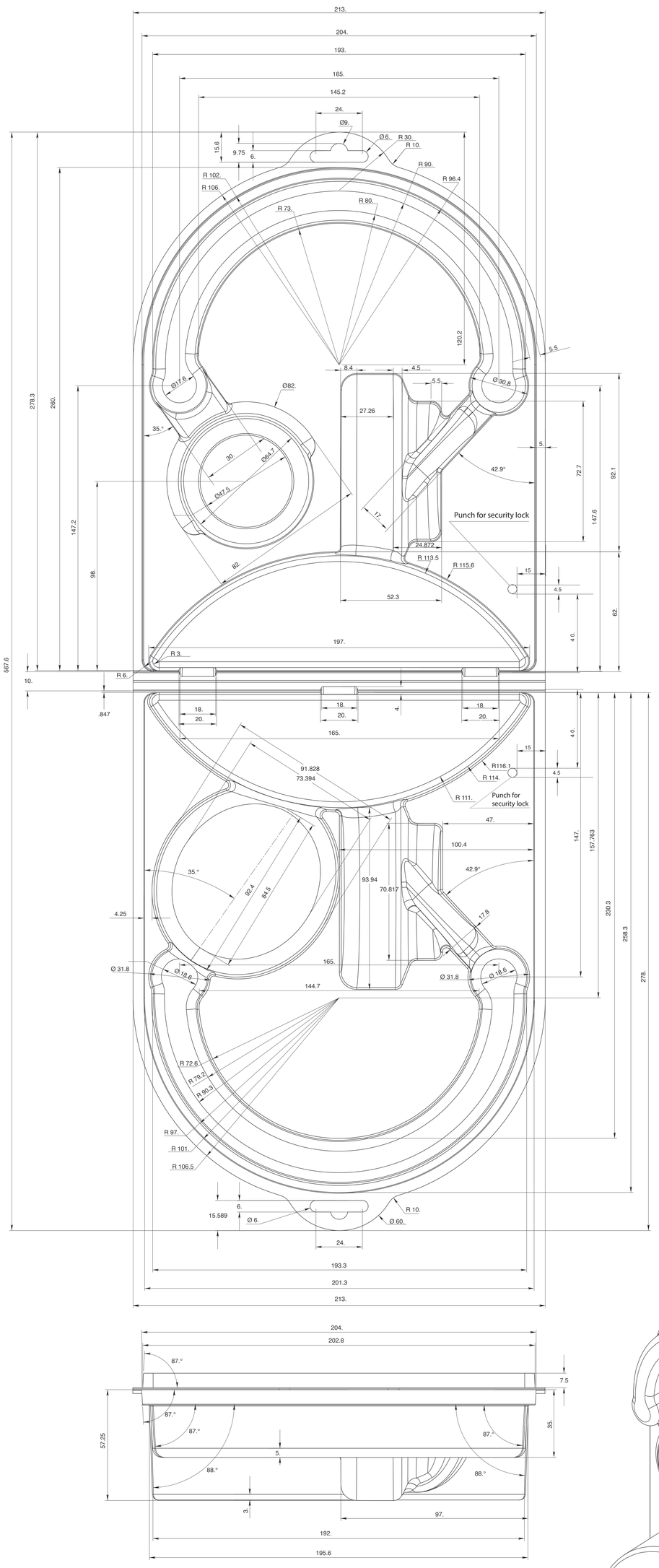

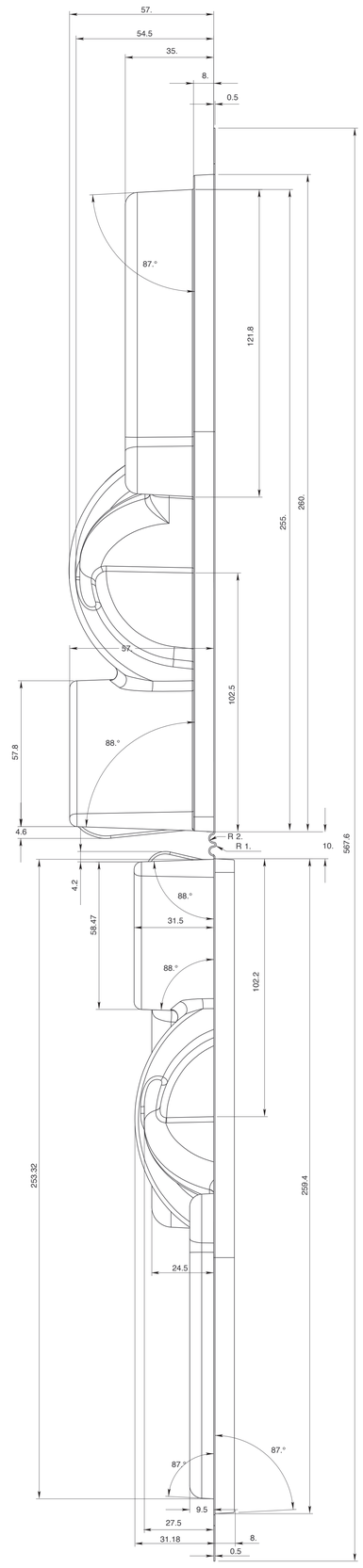

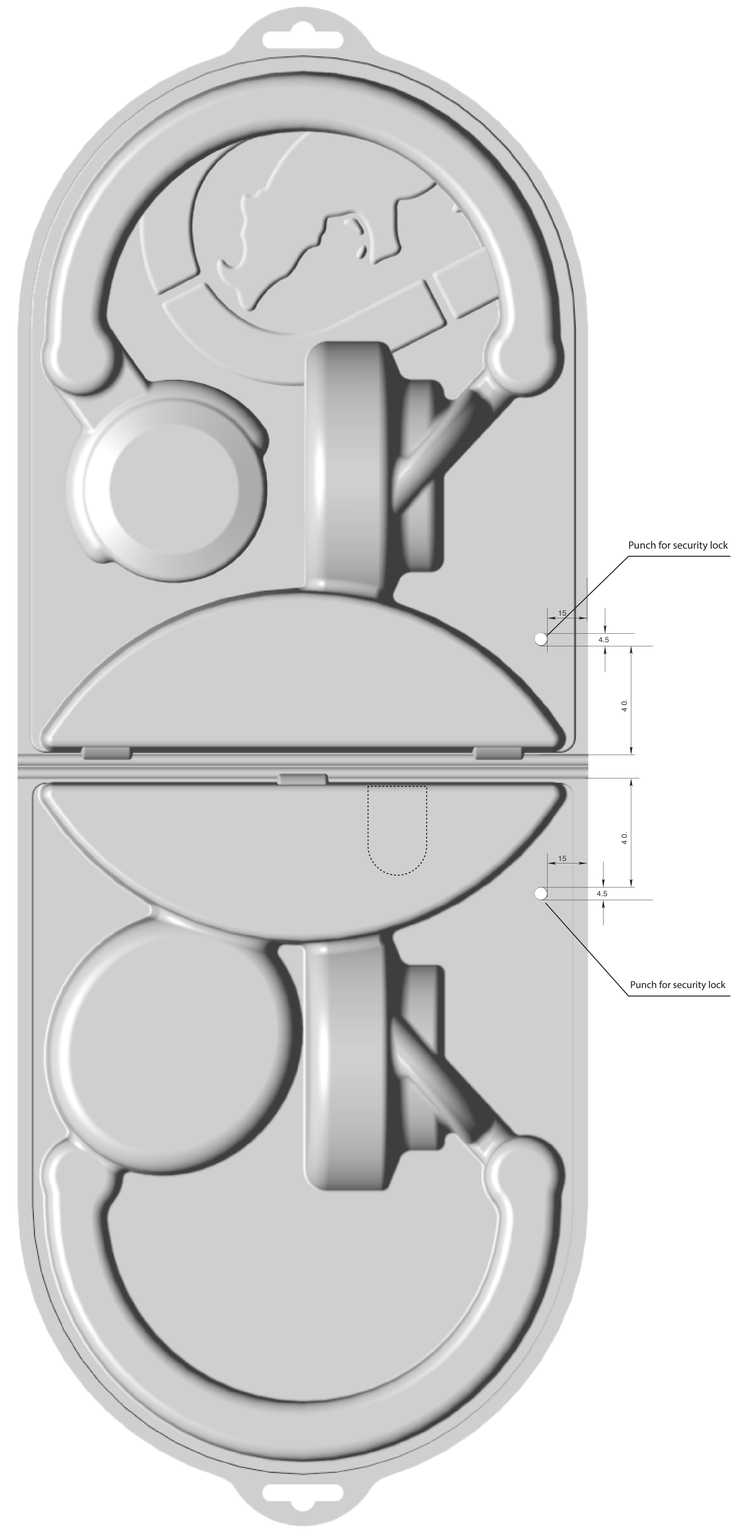

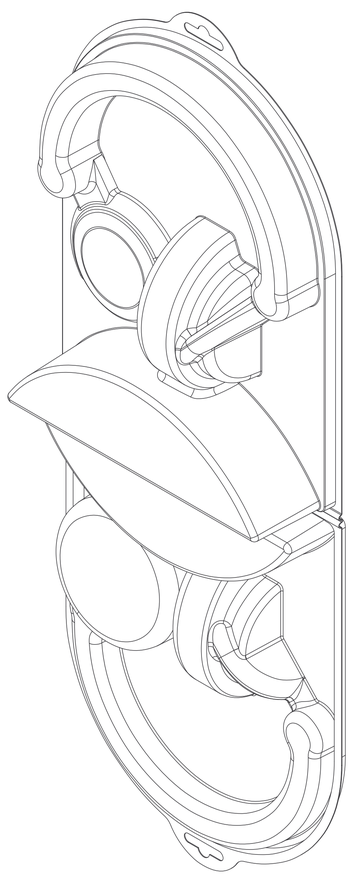

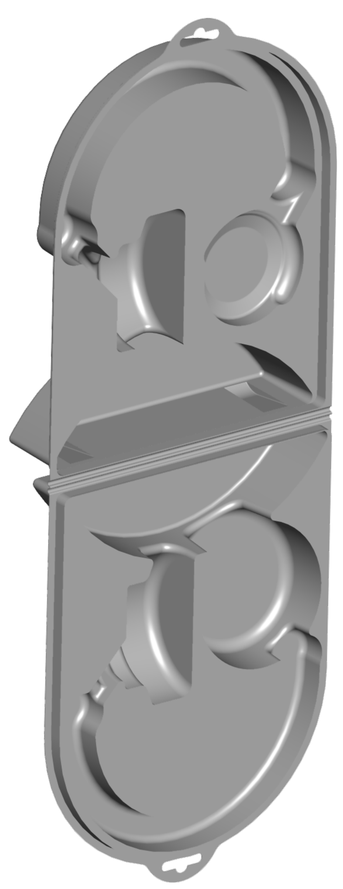

Logo Position

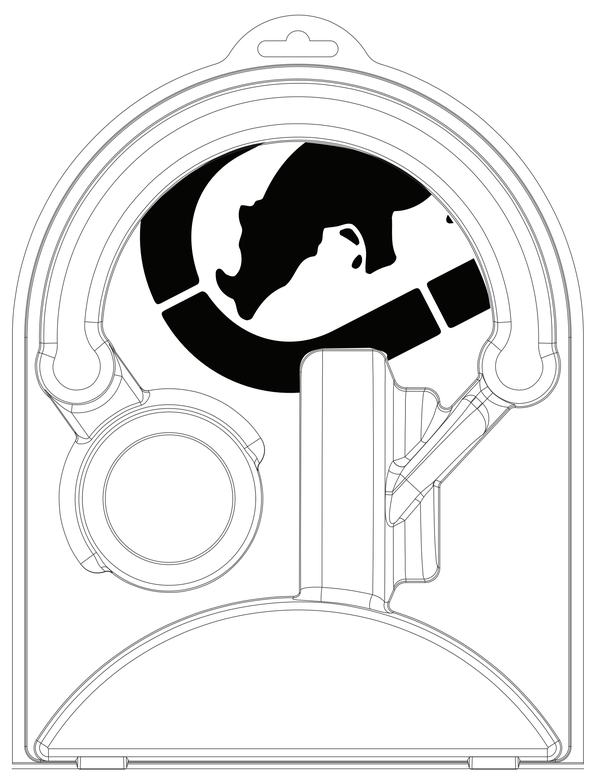

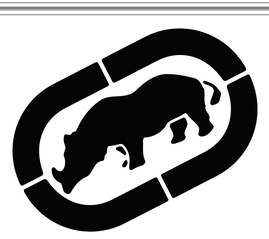

No	Change	Date	Init

	Name	Date
Created By		
Checked By		
Scale 1:1		

MIZCO
Mizco International, Inc.
Avenel, New Jersey
www.mizco.com • tel: 800-266-4026
email: digipowersolutions@mizco.com

Title

Drawing Number: FORCE

Issue