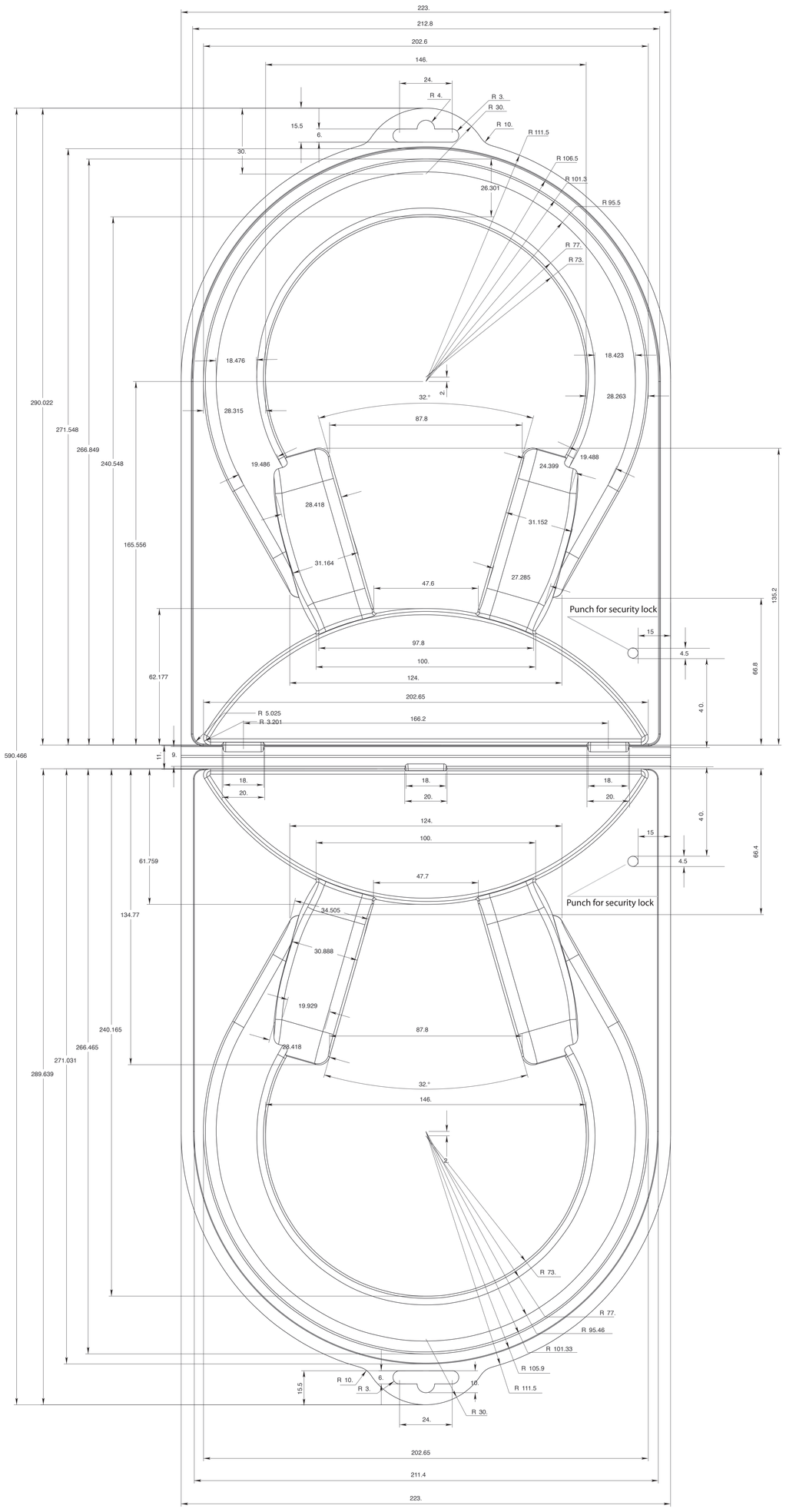

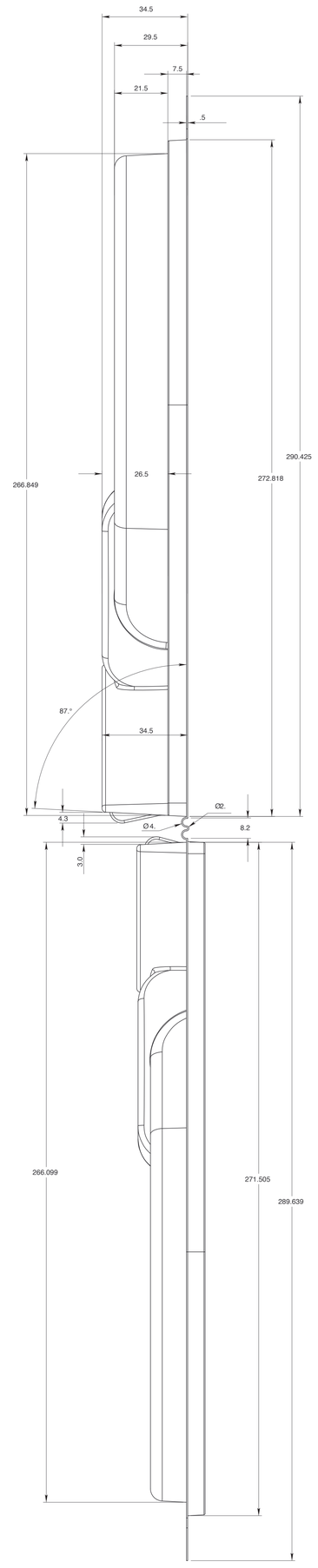

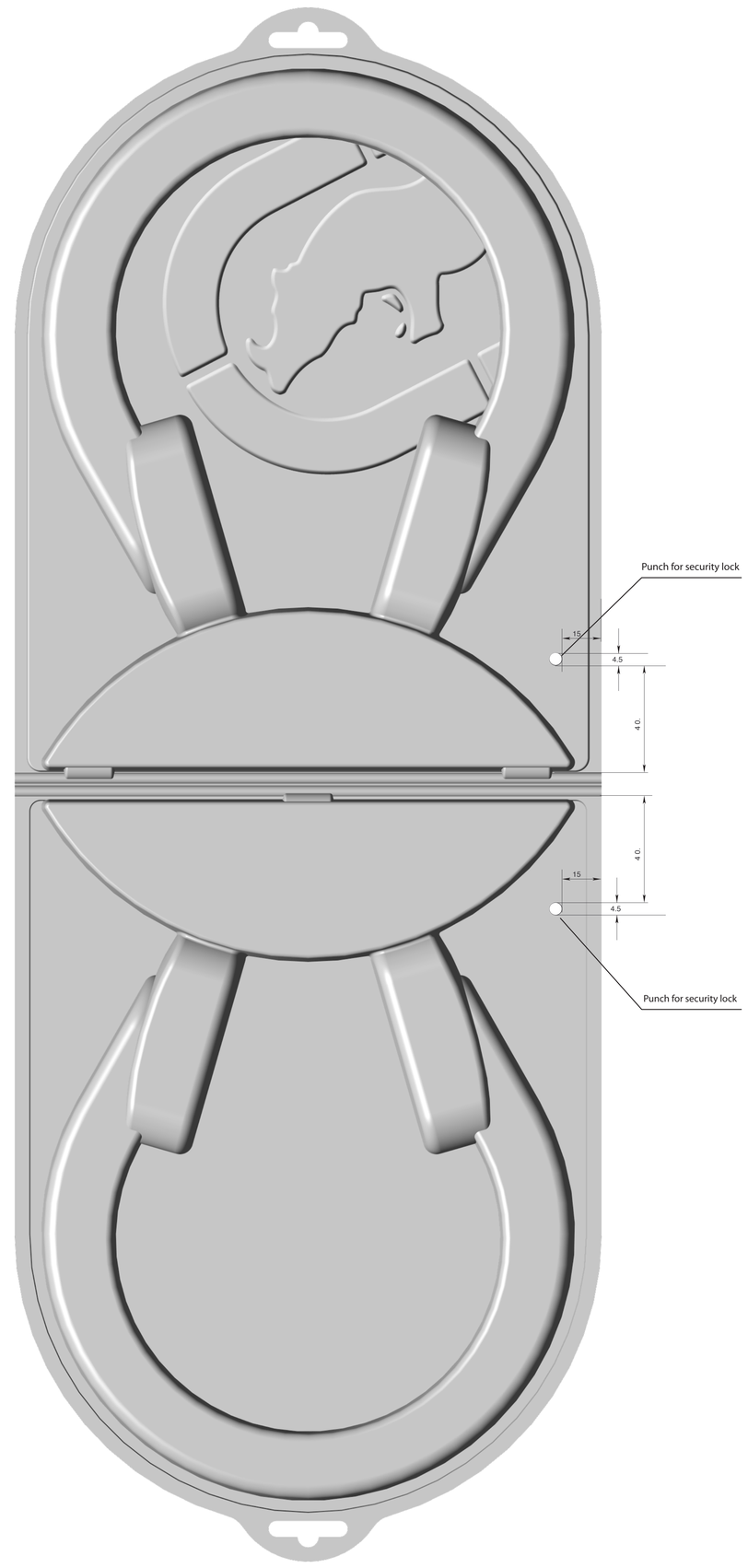

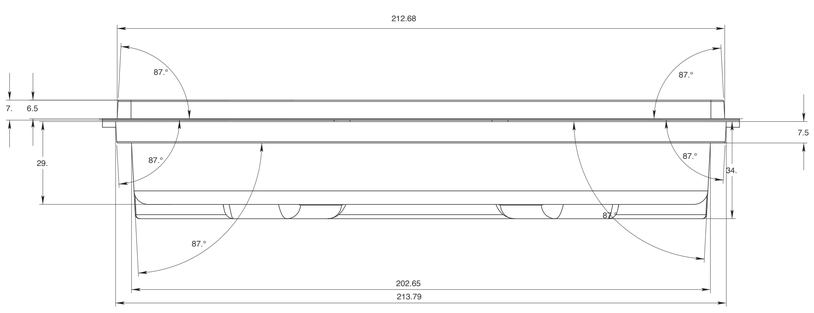

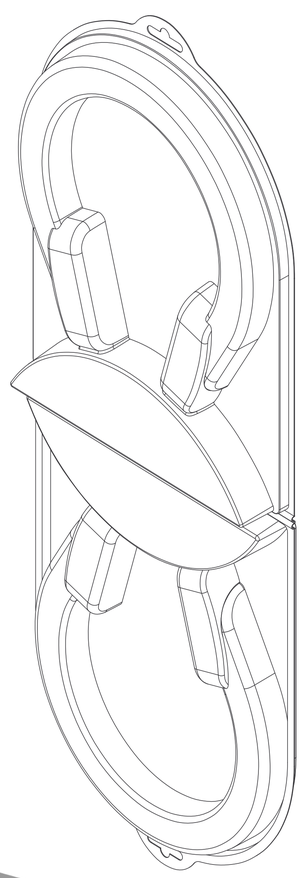

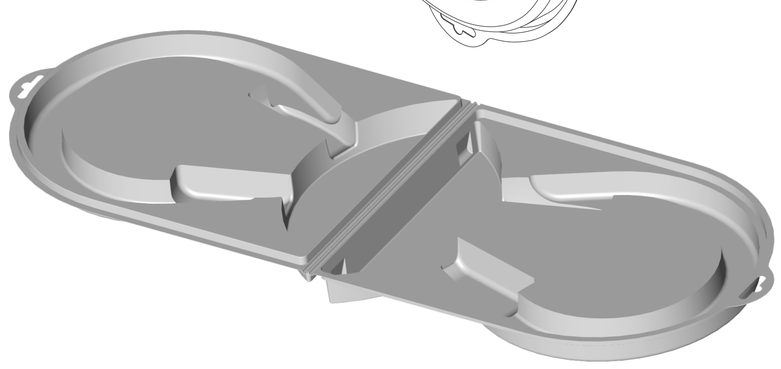

Logo Position

					Name	Date	Title
				Created By			
				Checked By			
				Scale			
				MIZCO Mizco International, Inc. Avenel, New Jersey www.mizco.com • tel: 800-266-4026 email: digipowersolutions@mizco.com			Drawing Number: PULSE	Issue
No	Change	Date	Init				